Optimizing screen alignment

Since the early 1950s the versatile screen printing process has been successfully implemented in various market segments. Nevertheless, in spite of the simplicity of this process, two major problems persist when setting machines up for printing: material registration and screen alignment - both of which directly impact upon quality.
AG Engineering has developed a new screen alignment system, though, which may be used in offline printing machines with reciprocating table, in inline printing machines where registration is located inside the printing table, and in inline printing machines where registration is carried out prior to printing.

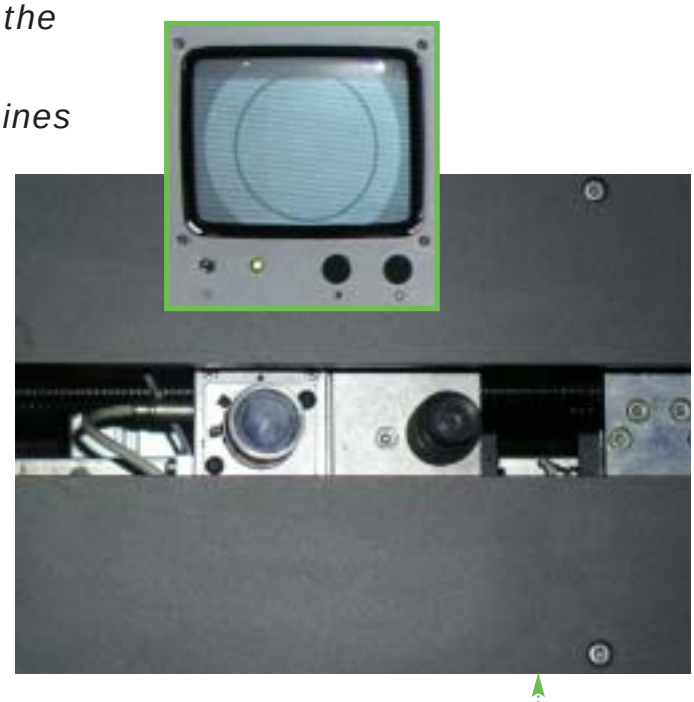

A.G. Engineering's CCD cameras

Lorenzo Rovaris*
A.G. ENGINEERING SRL

SIMPLIFIED SCREEN ALIGNMENT Fig 1

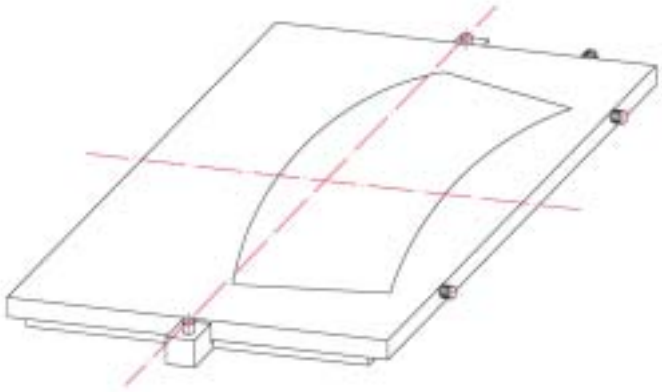

Since the early 1950´s the versatile screen printing process has undergone successful implements in various market segments:

- graphic and industrial applications;
- printed circuit (PC) production;
- glass printing and decoration.

In spite of the simplicity regarding this process, there are still two major problems in setting up the machines for printing: material registration and screen alignment. Both of these have a direct influence on quality - registration accuracy - and set up time.

Screen alignment is the most time-consuming operation when setting up the machine for a new printing job: not only valuable production time is lost due to long make-ready and set-up times, but there is also a significant loss of material and ink during test printing before a good and acceptable print result has been obtained.

MATERIAL REGISTRATION

There are various systems used for the registration of material, depending on the specific application:

- graphic: fully automatic feeders are used that feed the material up against two front lay stops and one side lay stop for proper edge registration. Often, optical sensors are used at each lay stop to verify and evaluate registration accuracy;
- PC board: exact positioning of the printed circuit board is achieved by mounting register pins in the printing table correlating to registration holes in the circuit board. This system works well for both manual and automatic feeding and is more reliable than edge registration;
- glass: positioning systems for glass may vary in design depending on size and shape of the glass, e.g. rectangular glass panels for appliance application or multi shaped, curved shaped glass used in the automotive industry.
  The glass is normally registered by automatic peripheral positioners using up to five or six axes, depending on the shape of the glass.
  The positioners can be located in the printing table or, as with in-line machines, in a special preprinting register station.

Lorenzo Rovaris, President of A.G. Engineering

SCREEN ALIGNMENT

The precise alignment of the screen image vis-à-vis the glass to be printed is far more difficult than actual glass registration. There are several reasons for this:

- size of the screens: the very large size of the screen printing frame itself can make it difficult to handle and align. Frame sizes of 3,000 x 1,700 millimetres are not uncommon in automotive glass printing; for architectural printing, sizes of 3,000 x 4,000 millimetres, using frames of up to four by five meters - or larger - are standard;
- frame profile and screen tension: to keep the weight of the printing frame as low as possible to facilitate handling, there is often a compromise between frame rigidity and handling capability. If a frame is not rigid enough it can easily be knocked out of square, thus distorting the image to such a degree that exact alignment is no longer possible. A too weak frame profile cannot hold or maintain a good enough screen tension - 18 to 20 N/cm is needed for proper accuracy; screen tensions of 12-14 N/cm may only be possible causing further problems with precise alignment and printing;
- image position in the screen: the stencil

making process is often outsourced or carried out in another prepress department where the need for precise positioning of the stencil image in relation to the frame - at least within a few millimetres - is not realized or understood. This may result in time-consuming major adjustments of the frame holding system to get the image lined up with the substrate.

Historical steps in alignment

Within the three specified screen printing areas, graphic, PC board production and glass printing, alignment of the screen in glass printing has proven to be more difficult not only because of size and shape but also often because of print design. In both graphic and PC board printing there is always a margin between the printed image and the edges of the substrate, an area that is conveniently used for positioning of register marks or pilot holes that are of great help when adjusting the image in the screen vis-à-vis the substrate.

The use of modern technology, where CCD cameras are used to read the position of register marks both in the screen and on the substrate, reduces set up times considerably and eliminates any waste otherwise caused by 'trial and error' printing during set up. The short make-ready time offered by the use of printing targets and CCD cameras also makes it possible to print small quantities for just-in-time production. In glass printing, on the other hand, it is often necessary - due to the design of the print - to print all the way out to the edges of the glass thereby restricting any use of register marks or other guides that could aid quick and easy screen alignment.

SIMPLIFIED SCREEN ALIGNMENT Fig 2

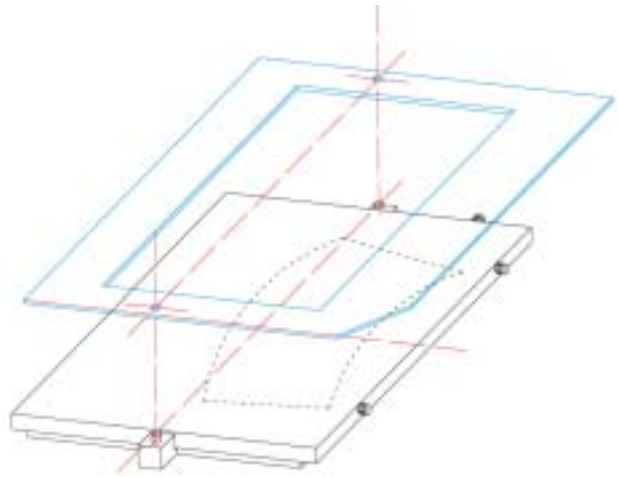

SIMPLIFIED SCREEN ALIGNMENT Fig 3

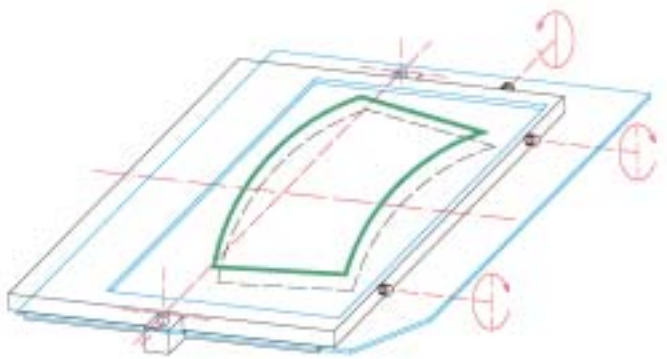

Screen alignment in glass printing

Short make-ready and set-up time are key factors in the printing of smaller batches and improving overall productivity. This becomes very critical when screen printing is performed in line with other equipment and processes. It is, therefore, of utmost importance that the proposed solution for reduction in set up time be focused to meet following criteria:

- easy of operation;
- no requirement for heavy fixture handling combined with devices operating outside the printer itself.

Transparent master foil frame

The first system for simplified screen alignment was originally introduced in printed circuit board printing and is still highly appreciated and used in many semiautomatic machines for close tolerance printing. This is how it works:

Step 1a. place the substrate to be printed on the printing table and position it against the register stops;

b. move the table into print position;

c. mount the screen, adjust it roughly and lock it;

MASTER FRAME HOLDER

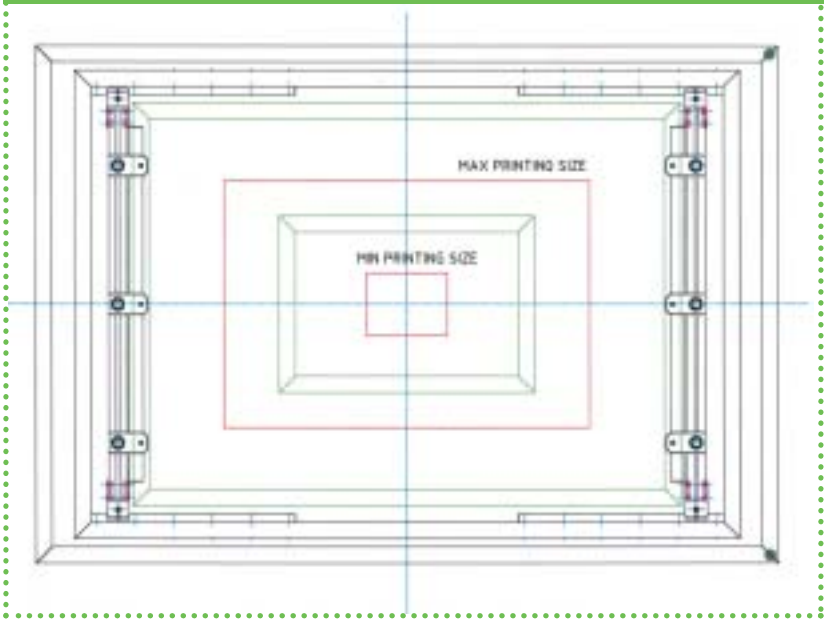

LOCATION OF CCD CAMERAS

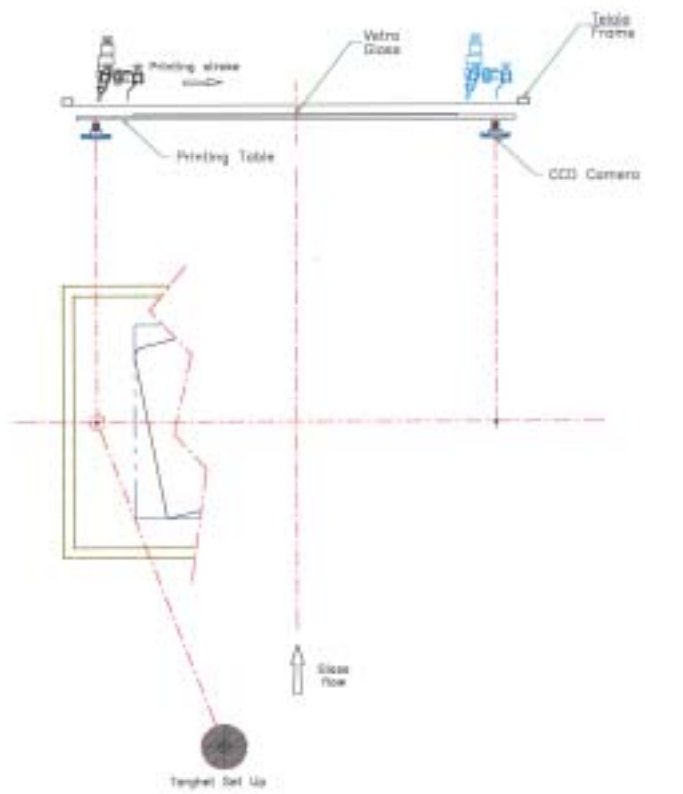

Step 2a. move the table out to print position;
b. put the transparent foil frame over the table and secure it to the pins that are attached to the sub table;
Step 3a. move the table into print position and make one print;
b. return the table to loading position;
c. adjust the position of the printing table with its substrate by its adjustment knobs until it is properly aligned with the printed image on the foil frame.

Note: The transparent foil frame is attached to the sub table and does not move during the adjustment of the printing table. Any deviation in the print can be easily adjusted and compensated for. The transparent foil is cleaned and, if needed, a second print can eventually be made for verification or final adjustments. The foil frame is removed and the printing can start without any misprints or wasted material.

This system has recently been upgraded, now using CCD cameras instead of transparent foil (new A.G. patent).

The first system for simplified screen alignment - originally introduced in PC board printing-is still highly appreciated, and used in many semiautomatic machines for close tolerance printing (see figures 1 to 3).

MASTER FRAME HOLDER

This master frame holder, meanwhile, is a rigid frame into which the actual printing frame is placed. The master frame holder may be adjusted to hold all various frame sizes suitable for the machine. The print head in the screen printing machine is equipped with two locating/register pins that engage with, and position, the master frame. A similar set of register pins are mounted on an offline screen registration table.

The master frame with the actual printing frame is positioned on the registration table engaging with its two register pins. The operator then adjusts the position of the screen to align up with two targets on the table before locking the screen in its position in the master frame holder. The master frame is then mounted in its predetermined fixed position in the printing head and only minor adjustments are needed for final alignment. This system does, though, have disadvantages:

- cost;
- very heavy fixture and frame handling;
- extra floor space needed for the registration table and additional frame handling;
- not practical for larger printing sizes;
- additional preparation needed for adding register marks on the registration table for various printing sizes.

Everything has to be lined up according to the centreline and screen making and image position have to be accurate.

SET-UP TARGETS, LIGHTING SPOTS AND REGISTER PINS

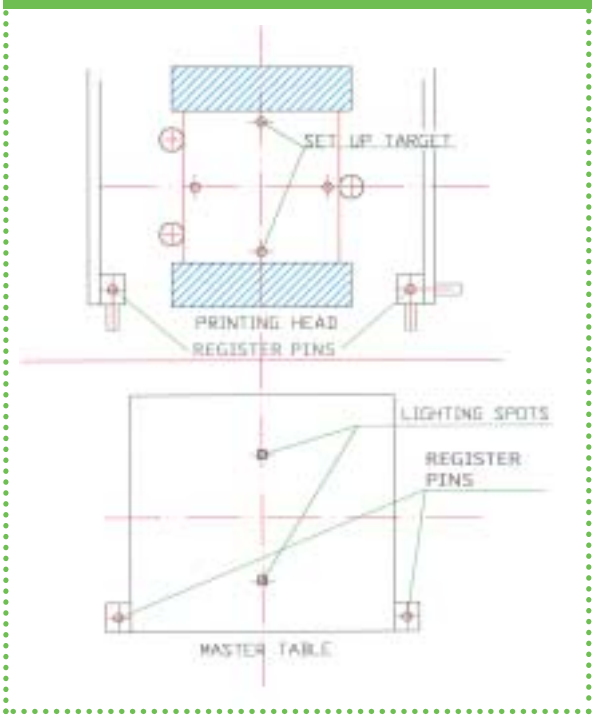

CCD cameras and targets on the screen

CCD cameras are located underneath the printing table. The system uses the centreline of the print area as a reference. Two targets have to be imposed in the screen along its centreline.

Corresponding targets are installed in CCD camera software, with screen alignment being carried out in two ways:

- semi automatic: the frame is moved by manual adjustment knobs or by servomotors until the targets in the screen align with the superimposed targets on the camera monitors;
- fully automatic: the adjustment of the screen is executed via servomotors controlled by a PC system with target recognition software.

The disadvantages are cost, and the problem of initially mounting the targets with sufficient accuracy in the screens.

THE AG ENGINEERING SOLUTION

The latest development in screen alignment systems by AG Engineering - patents pending - has the following advantages:

- no need for targets in the screen;
- ease of operation, even by unskilled personnel;
- no external set up systems or fixtures required;
- cost effectiveness.

The system can be used for both offline printing machines with reciprocating table, for inline printing machines where registration is located inside the printing table, and in inline printing machines where registration is carried out before the printing station.

C-1 CCD system

This System is lised for printing machines where registration is located inside the printing table. The CCD cameras and locators are positioned under the table, its cameras facing upwards. The system includes:

- three CCD cameras mounted on a shuttle bracket under the printing table;
- three vertical cylindrical rollers for glass positioning;
- three shuttle units holding one camera and one positioning roller each;
- one operating console with panel view, controls and three monitors.

Two CCD cameras are dedicated for the two front positioning rollers and one for the side positioning roller. Each camera and positioning roller is mounted on a shuttle bracket that is moved and positioned via servomotor with absolute encoder.

Particular features and operation

Cylindrical positioning rollers move the glass to an exact position according to the position recorded by CCD cameras. Each camera is equipped with a special lens having an engraved circle of the same diameter as the positioning rollers. A shuttle bracket, meanwhile, alternates the position of the positioning roller in relation to the CCD camera whenever needed during set up or for any adjustment during printing. The operating console holds the panel view, necessary controls and monitors for the CCD cameras. This alignment system does not require any printing frame adjustments; the frame remains firmly locked during set up and printing. When collimation is done, the 's' correction can subsequently be introduced manually or automatically via panel view/PLC.

As regards operation, the printing frame is roughly centred and mounted in the printing machine, and firmly locked in this position. The printing head is lowered into print position (on machines with stationary printing table) or the table is moved into print position (in machines with reciprocating table movement). The CCD cameras are then moved one by one until the circle - having same diameter as the positioning rollers - lines up with the edge of the image in the printing screen. This operation is repeated with all three cameras until the three circles are in tangent vis-à-vis the edges of the screen image.

The shuttle bracket may be activated,

C-1 CCD SYSTEM

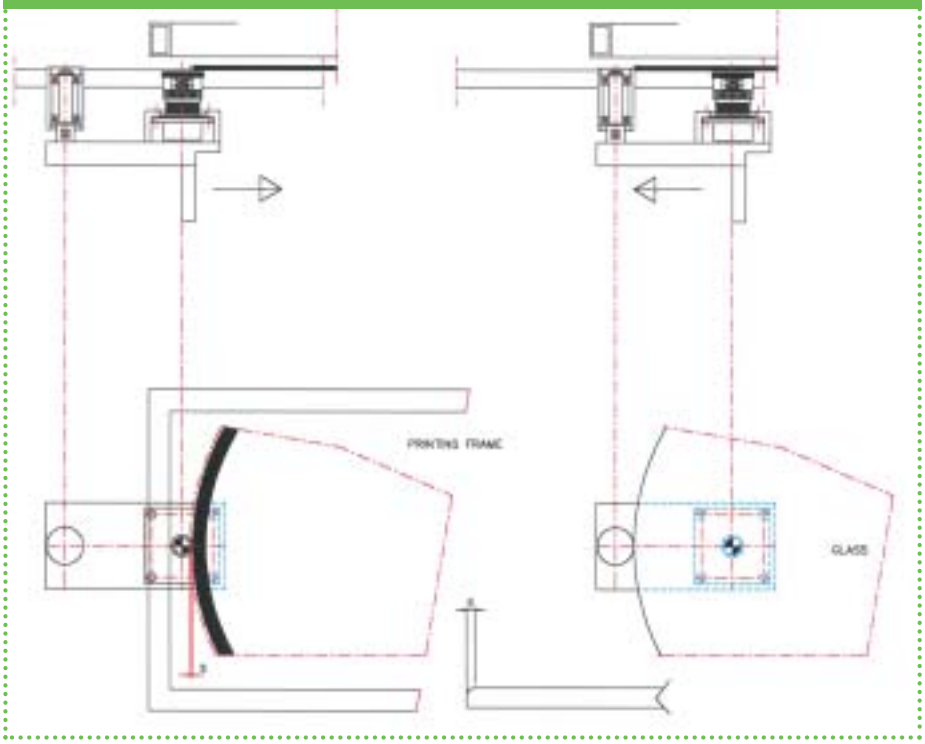

C-2 CCD SYSTEM

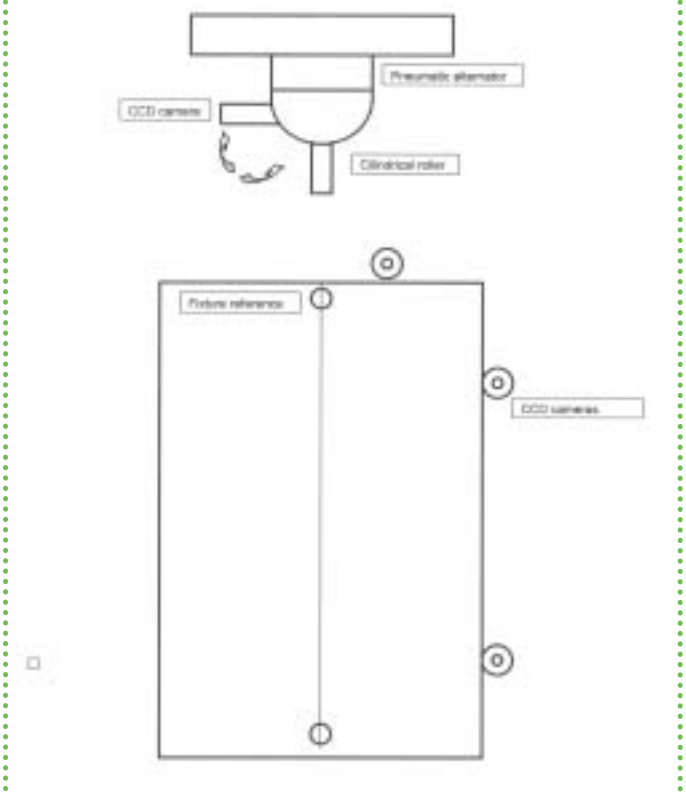

allowing the positioning rollers to move in where the cameras were located. Both the glass and the printing screen are, thus, precisely aligned. The printing machine is set up in register for printing and ready for production. The operator inspects the first print and can conveniently make any fine adjustments, if needed, from the panel view control console.

C-2 CCD system

This system is used for in line screen printing machines where cameras and locators are positioned above the register station prior to the printing station. Its cameras face downwards. The system includes:

- three CCD cameras mounted on the registration station;
- cylindrical rollers for glass registration;
- pneumatic rotator;
- operator console with the three CRT's.

In terms of the CCD cameras, two of them are dedicated to control the front registration rollers whereas the third one controls the side registration roller. On the front glass of each camera a circle is applied which has the same diameter as the registration roller. Both cameras and registration rollers are mounted on a 90° L.H. / R.H. pneumatic controlled rotating actuator. The operator controls what is happening via panel view.

The cylindrical rollers used are nylon made with an internal metal rod. They register the glass according to a position given by the CCD cameras. The pneumatic 90° L.H. / R.H. actuator alternates the position of the CCD camera with the registration roller every time the operator requires it to do so. At the operator console, meanwhile, the panel view, controls and camera monitors may all be mounted. This alignment system does not require adjustment of the screen position, and the frame remains firmly locked during set up and printing.

For operation, the screen is mounted on the holding bars and locked into position. The screen should be roughly positioned on the centreline. The fixture is then positioned on the registration station lodging on the pins, before being advanced to the printing station and printed. The fixture is subsequently returned to the registration station. The CCD cameras facing down can then be activated. The operator, via the panel view, moves the CCD cameras one by one until the projected circle collimates with the edge pattern printed on the fixture. This operation is repeated so that all three circles are tangent to the edge of the printed image, as can be seen on the monitors.

At this stage, the pneumatic 90° actuator may be activated and the three cameras swap position with the registration rollers. Both the printed pattern and the glass will be aligned, and the printer is ready for printing. After the first printing cycle, the operator will judge if the printed pattern is successfully aligned or if any minor adjustments are needed. Any adjustments performed can be monitored on the screens before removing the glass from the printer.

Final note

The two described systems allow a set-up time of no longer than five to seven minutes, the advantage being that screen alignment is carried out directly in relation to the image to be printed - without any need for registration marks, offline fixtures or any high accuracy demands for stencil positioning. This is a smart solution to the time-honoured problem of material registration and screen alignment, and results in drastically shortened set up times, is easy to use and gives overall improvement in both printing quality and productivity. ■

***President**
AG ENGINEERING - ITALY

Information Service no. 110
See Contents for Info Service page